Journal and thrust bearings' data and lube oil circuit's restriction orifices definition for BB pump

COPY COMPLIANT to the original document resident on the computer system at the time of printing

Index

1. Purpose 3
2. Abbreviations. 3
3. Scope. 3
4. General procedure: description. 3
5. Calculation method. 5
5.1. Journal bearing's design criteria. 5
5.2. Thrust bearing's design criteria. 7
5.3. Restriction orifice. 8
6. Acceptance Criteria. 9
7. Design recommendations. 9
8. References 9
9. Appendix. 9
9.1. Calculation Tools. 10
9.1.1. Mod.426 10
9.1.2. Mod.427 11
9.1.3. Mod.428 12

COPY COMPLIANT to the original document resident on the computer system at the time of printing

1. Purpose

The document describes the criteria and the procedure to define the dimensions of the restriction orifices, to be installed in the lube oil supply's circuit to properly distribute the lubricant flowrates among all the bearings on the basis of their requirements in terms of required oil flowrate, power loss, minimum film thickness.

If these bearing data are not available, the calculation spreadsheet allows to estimate them preliminarily. They are significant to select and properly size the lubricant oil system and the relevant cooler.

2. Abbreviations.

BB Between bearings (API 610)
RO Restriction orifice
DOE Design of experiments

3. Scope.

This procedure is applicable to BB pumps for the equipped with sleeve bearings.

4. General procedure: description.

In case that lube oil system is foreseen for the bearing lubrication, it is necessary to properly define and install the restriction orifices on the supply circuit, in order to properly distribute the oil flowrates among the utilities with the required inlet pressure. These requirements are typical for each bearing and they are usually defined by the manufacturer.

In Figure 1 Typical layout of lube oil supply circuit.it is reported a common layout of the lube oil supply circuit. In addition to the bearings' requirements, the other input data are the dimensions of the restriction orifices #5 and # and the oil supply pressure at point #7.

In Figure 2 Flow chart. it reported the flow chart, which represents the method adopted for the execution of the calculation.

COPY COMPLIANT to the original document resident on the computer system at the time of printing

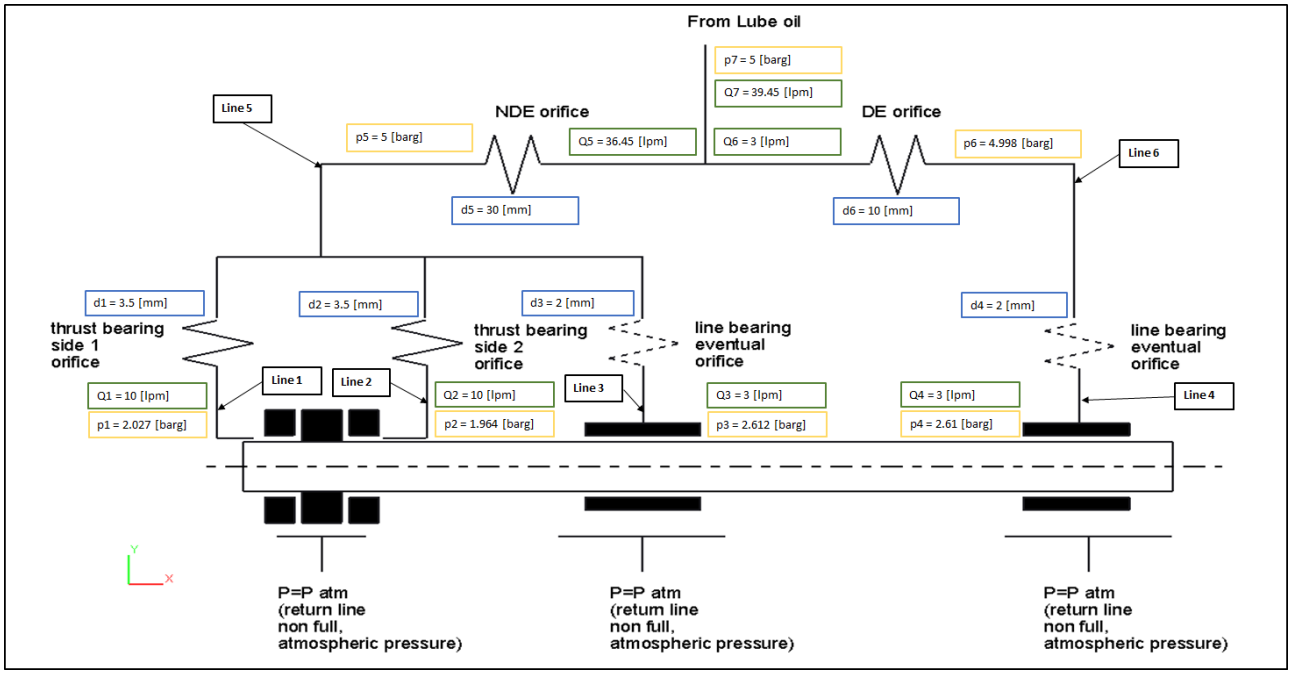

Figure 1 Typical layout of lube oil supply circuit.

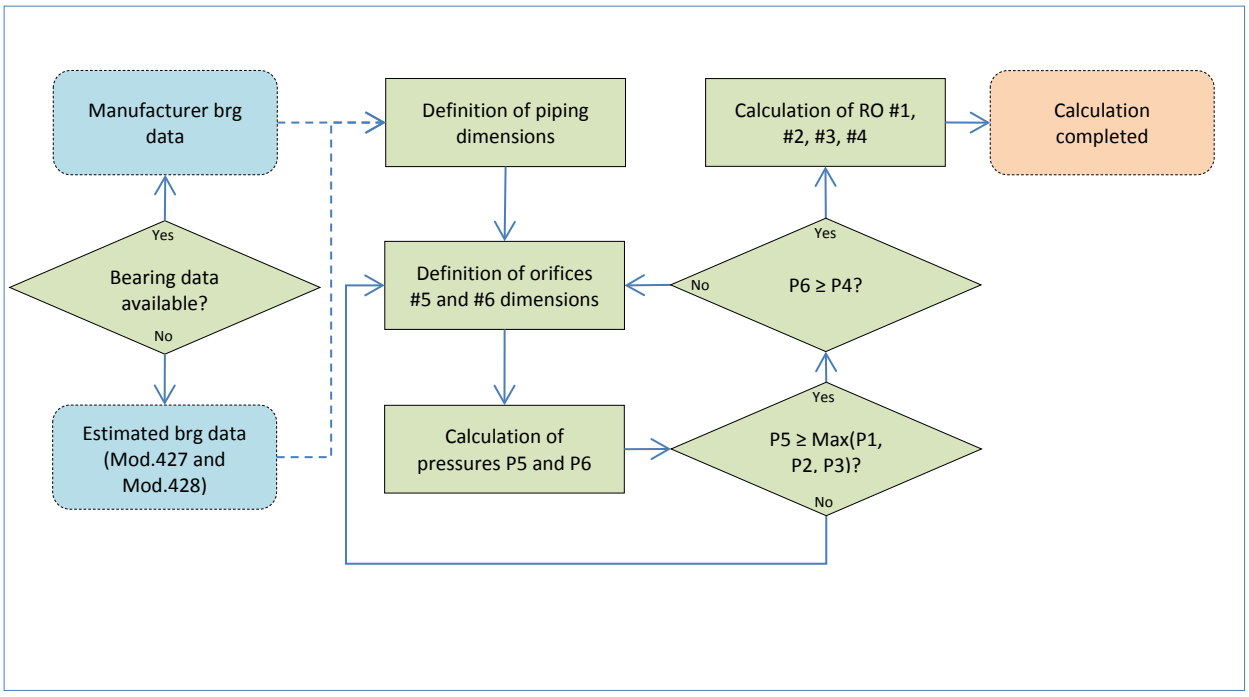

Figure 2 Flow chart.

COPY COMPLIANT to the original document resident on the computer system at the time of printing

5. Calculation method.

The calculation is carried out on the basis of the hypothesis that the oil flowrates required by the bearings are constant and not affected by inlet pressure. In fact, the required flowrate represents the oil leakage at the edge of the bearing, which shall be reintegrated for the proper operation. This is expected to be affected significantly by rotating speed and bearing clearance, but not by the inlet pressure.

5.1. Journal bearing's design criteria.

The design criteria for the definition of operating limits are listed in the following:

1) Minimum film thickness:

   As per section 6.4 of "Introduction of Dynamics Rotor-Bearing Systems" by W. J. Chen and E. J. Gunter, the recommended minimum film thickness is usually 1.0 mils or 0.5 mils for smaller shaft diameters. As reference, the empirical expression proposed by Gardner is considered:

$$h = 6.85\ x\ 10^{-3}\ x\ D^{0.71}\ x\ N^{0.43}$$

   where:

   - h [mils] is the recommended minim film thickness.
   - D [inches] is the bearing diameter.
   - N [rpm] is the rotational speed.

   As per R. C. Juvinall's Fundamentals of Machine Component Design, typical film thicknesses at the thinnest point are 0.008 – 0.020 mm / 0.0003 – 0.0008 in. In general, the minimum acceptable film thickness shall be estimated through Trumpler's formula:

$$h = 0.005 + 0.00004\ D\ [mm] = 0.0002 + 0.00004\ D\ [inch]$$

   where:

   - D is the bearing diameter.

   In the relevant spreadsheet Gardner's formula is considered as reference, since it is the most restrictive criteria.

2) Maximum film pressure:

   As per section 6.4 of "Introduction of Dynamics Rotor-Bearing Systems" by W. J. Chen and E. J. Gunter, the value of 1000-1500 psi is recommended for the maximum allowable film pressure under normal operation.

COPY COMPLIANT to the original document resident on the computer system at the time of printing

3) Maximum oil temperature and temperature rise:
   As per clause 6.10.2.7 of API 610 standard, the bearing oil temperature rise in pressurized systems shall not exceed 50°F / 28 K and if bearing-temperature sensors are supplied, bearing metal temperatures shall not exceed 200°F / 93°C.

The calculation module Mod.427 allows to estimate the performances of the journal bearing (Trillium design), in terms of oil supply pressure, heat to be dissipated and minimum film thickness, outlet oil temperature and maximum film pressure.

A parametric analysis is necessary to generate the input data for the calculation module. The considered parameters are the following, with the relevant variability ranges:

- Journal bearing diameter [D]: 60, 70, 80, 90, 100, 110, 120, 130 mm.
- Oil supply temperature [T]: 45 – 60°C.
- Radial load [L_r]: 4000 – 8000 N.
- Oil viscosity [v]: ISO VG 32, 46, 68.

In addition, the following additional design data are considered:

- Journal bearing length [L]: D/2
- Journal bearing diametral clearance [C]:

Shaft diameter [mm]	Clearance [mm]
60	0.1108
70	0.1208
80	0.1308
90	0.1408
100	0.1508
110	0.1608
120	0.1708
130	0.1808

The operating data in terms of oil supply pressure, heat to be dissipated, minimum film thickness, outlet oil temperature and maximum film pressure are calculated through Dyrobes' BePerf software.

In order to limit the cases to be studied and to reduce the calculation time, the machine learning method is used though MSC Odyssee. The software defines the DOE on the basis Montecarlo's criteria, in terms of number and type of cases. The results of Dyrobes' BePerf are used to feed data to machine learning, which defines the optimal interpolation method in terms of accuracy, to be used for the evaluation of all the required data.This allows to calculate all the input data to be included the Mod.427.

COPY COMPLIANT to the original document resident on the computer system at the time of printing

The calculation module Mod.427 carries out linear interpolation of the tabulated input data to estimate the bearing performances for intermediate operating conditions.

5.2. Thrust bearing's design criteria.

The design of thrust bearing is carried out considering Kingsbury's data as reference.

For this kind of bearings, the operating data shall be provided by the manufacturer for detailed calculations. If these are not available, it is possible to carry out an estimation through the calculation module Mod.428, which allows to estimate the performances of the thrust bearing in terms of oil supply pressure, heat to be dissipated, minimum film thickness, the outlet temperature and the maximum film pressure.

The following criteria shall be complied:

1) Maximum oil temperature and temperature rise:
   As per clause 6.10.2.7 of API 610 standard, the bearing oil temperature rise in pressurized systems shall not exceed 50°F / 28 K and if bearing-temperature sensors are supplied, bearing metal temperatures shall not exceed 200°F / 93°C.

A parametric analysis is necessary to generate the input data for the calculation module. The considered parameters are the following, with the relevant variability ranges:

- Thrust bearing diameter [D]: 5, 6, 7 inches.
- Oil supply temperature [T]: 45 – 60°C.
- Axial load [L_a]: 9000ì – 20000 N for 5'', 10000 – 30000 for 6'', 20000 – 40000 for 7''.
- Pads number [N]: 6, 8.
- Oil viscosity [v]: ISO VG 32, 46, 68.

The operating data in terms of oil supply pressure, heat to be dissipated, minimum film thickness, the outlet temperature and the maximum film pressure are calculated through Dyrobes' BePerf software. In particular, the leakage flow is calculated as the oil quantity which leaks out the bearing edges for the action of operating speed and pressure. This is the oil flow to be re-integrated in the bearing in case of direct lubrication. If a different type of oil supply is used, this value shall be incresed of 50% to define the actual required flowrate.

In order to limit the cases to be studied and to reduce the calculation time, the machine learning method is used though MSC Odyssee. The software defines the DOE on the basis Montecarlo's criteria, in terms of number and type of cases. The results of Dyrobes' BePerf are used to feed data

COPY COMPLIANT to the original document resident on the computer system at the time of printing

to machine learning, which defines the optimal interpolation method in terms of accuracy, to be used for the evaluation of all the required data.This allows to calculate all the input data to be included the Mod.428.

The calculation module Mod.428 carries out linear interpolation of the tabulated input data to estimate the bearing performances for intermediate operating conditions.

5.3. Restriction orifice.

The leakage flow and the pressure drop across the restriction orifice are estimated based on the ISO 5167-2 Standard.

The discharge coefficient C is given by Reader-Harris/Gallagher's equation (ref. ISO 5167-2 sect. 5.3.2.1).

$$C = 0.5961 + 0.0261\beta^2 - 0.216\beta^8 + 0.000521\left(\frac{10^6\beta}{Re_D}\right)^{0.7} + (0.0188 + 0.0063A)\beta^{3.5}\left(\frac{10^6}{Re_D}\right)^{0.3} +$$

$$+ \left(0.043 + 0.80e^{-10L_1} - 0.123e^{-7L_1}\right)(1 - 0.11A)\frac{\beta^4}{1-\beta^4} - 0.031\left(M_2 - 0.8M_2^{1.1}\right)\beta^{1.3}$$

If D < 71.12mm (2.8 inch), the following term shall be added to the above reported equation:

$$+ 0.011(0.075 - \beta)\left(2.8 - \frac{D}{25.4}\right)$$

$$Re_D = \frac{D\,c}{\nu}$$

Where:

- D [mm] is the pipe diameter;
- c [m/s] is the fluid speed in the pipig;
- v [mm^2/s] is the kinematic viscosity if the fluid
- β is the ratio between the orifice diameter d and the pipe diameter D;
- Re_D is the Reynolds number calculated on the pipe section;
- $L_1=l_1/D$ with l_1 the distance of the upstream tapping from the upstream face of the plate;
- $L_2=l_2/D$ with l_2 the distance of the downstream tapping from the downstream face of the plate;

COPY COMPLIANT to the original document resident on the computer system at the time of printing

- M_2 and A are defined as in the following:

$$M_2 = \frac{2L_2}{1-\beta}$$

$$A = \left(\frac{19000\beta}{Re_D}\right)^{0.6}$$

In the application, the coefficients L_1, L_2 are usually equal to zero.

The pressure drop across the orifice is extracted from the following (ref. ISO 5167-2 sect. 4).

$$q_m = \frac{C}{\sqrt{1-\beta^4}}\varepsilon\frac{\pi}{4}d^2\sqrt{2\Delta p\,\rho_1}$$

Where q_m is the mass flowrate [kg/s]; ε is the expansibility factor, whose effect is negligible (equal to 1) for the applicable cases of this procedure.

6. Acceptance Criteria.

All the calculated data shall be acceptable as per the relevant legend. Minimum acceptable restriction orifice diameter is 3 mm. It is possible to accept up to 2 mm diameter, if no different solutions are possible.

7. Design recommendations.

It is recommended that the diameter of each restriction orifice is not lower than 3 mm. If it is not possible to define a suitable solution in terms of bearing inlet pressures, lower diameter up to 2 mm can be accepted.

8. References

Practical Rotordynamics and Fluid Film Bearing Design – W. J. Chen

Fundamentals of Machine Component Design - R. C. Juvinall

ISO 5167-2

Module Mod.426

Module Mod.427

Module Mod.428

9. Appendix.

COPY COMPLIANT to the original document resident on the computer system at the time of printing

9.1. Calculation Tools.

9.1.1. Mod.426

The following instructions shall be considered to carry out the calculation by means of the dedicated tool Mod.426:

1) Compile all the input data in the following sections to allow the initialization of the calculation:
   a. Operating Data.
   b. Line 1: External Side Thrust Bearing.
   c. Line 2: Internal Side Thrust Bearing.
   d. Line 3: Nde Journal Bearing.
   e. Line 4: De Journal Bearing.
   f. Line 5.
   g. Line 6.

   Notes:
   - The dimensions of restriction orifices #5 and #6 shall be defined to initialize the calculation.
   - The input data of the bearings shall be compiled before the initialization of the calculation.
   - If different information are not available, the supply oil pressure for each bearing (journal or thrust) shall be selected in the usual range 0.6-1.0 barg.
2) Run the calculation with the dedicated button. The tool considers 0.5 bar accuracy and 1000 iterations as default initial parameters. If the results are not acceptable (refer to following steps), these values can be modified.

CALCULATION PARAMETERS			
Iteration	[nr]	1000.00	Max number of iterations
Accuracy	[barg]	0.5000	Required accuracy in pressures' calculations
Actual accuracy	[barg]	0.2870	Actual accuracy of calculated data

Figure 3 Calculation parameters.

3) Check the results in the "Calculated data" section. The results are acceptable on the basis of criteria at Figure 5 Acceptance criteria..

COPY COMPLIANT to the original document resident on the computer system at the time of printing

CALCULATED DATA					
Line #	Q [lpm]	d [mm]	p [barg]	Notes diameter	Notes pressure
1	10.000	3.5	1.959	Orifice diameter acceptable	Pressure acceptable
2	10.000	3.5	1.911	Orifice diameter acceptable	Pressure acceptable
3	3.000	2.0	2.542	Orifice diameter lower than 3 mm. If possible, increase orifice 5.	Pressure acceptable
4	3.000	2.0	2.540	Orifice diameter lower than 3 mm. If possible, increase orifice 6.	Pressure acceptable
5	36.450	30.0	5.000	Orifice diameter acceptable	Pressure acceptable
6	3.000	10.0	4.998	Orifice diameter acceptable	Pressure acceptable
7	39.450	N/A	5.000	N/A	N/A

Figure 4 Results summary.

Warnings legend	
	= Acceptable data.
	= Not optimal data. User shall modify input data to have fully acceptable solution (green). If not possibile, yellow fields can be accepted as well.
	= Not acceptable data. User shall modify input data to find an acceptable solution.

Figure 5 Acceptance criteria.

4) If all the results are acceptable, the calculation is completed. Otherwise, input data shall be modified as indicated in the notes and the calculation shall be run again.
5) Accuracy can be updated, if necessary. If the result is not aligned with the set accuracy, the number of iterations shall be increased.
6) All the calculated data are reported in Figure 1 Typical layout of lube oil supply circuit..

9.1.2. Mod.427

The following instructions shall be considered to carry out the calculation by means of the dedicated tool Mod.427:

1) Compile all the input data in the following sections to allow the initialization of the calculation (ref. Figure 6 Calculation module.):
    a. Operating Data.
    b. Journal Bearing Data.

COPY COMPLIANT to the original document resident on the computer system at the time of printing

OPERATING DATA			
$v_{nominal}$	ISO VG	46	Oil type
T_{inlet}	[°C]	51.50	Oil supply temperature (45 - 60°C)
ρ	[kg/m^3]	848.71	Oil density at inlet temperature
ν	[mm^2/s]	28.07	Oil viscosity at inlet temperature
c	[BTU/lb/F]	0.4756	Oil specific heat at inlet temperature
ρ	[kg/m^3]	842.31	Oil density at outlet temperature
ν	[mm^2/s]	19.13	Oil viscosity at outlet temperature
c	[BTU/lb/F]	0.4843	Oil specific heat at outlet temperature
N	[rpm]	2990.00	Operating speed

JOURNAL BEARING DATA			
$DN_{journal}$	[mm]	70.00	Journal bearing diameter (60, 70, 80, 90, 100, 110, 120, 130 mm)
F_{radial}	[N]	4662.00	Radial load acting on the journal bearing
$Q_{leakage}$	[lpm]	1.044	Required oil supply flow
P	[kW]	0.244	Power to be dissipated
T_{outlet}	[°C]	61.6	Outlet oil temperature
ΔT	[°C]	10.1	Oil temperature rise
$ΔT_{max}$	[°C]	28.0	Max. acceptable oil temperature rise as per API 610's cl. 6.10.2.7
p	[kPa]	7029.7	Maximum film pressure
p_{max}	[kPa]	10340.0	Max. acceptable film pressure as per Chen's recommendation
t	[mm]	0.015566	Minimum film thickness
$t_{Gardner}$	[mm]	0.011160	Min. film thickness as per Gardner's formula

Figure 6 Calculation module.

2) Run the calculation with the dedicated button.
3) Check the results. The results are acceptable on the basis of criteria at Figure 7 Acceptance criteria..

Warnings legend	
●	= Acceptale data.
●	= Not acceptable data. User shall modify input data to find an acceptable solution. If not possible, specific calculation shall be carried out.

Figure 7 Acceptance criteria.

4) If all the results are acceptable, the calculation is completed. Otherwise, input data shall be modified as indicated in the notes and the calculation shall be run again. If it is not possible to define a combination of input data to have an acceptable solution, a specific calculation shall be carried out.

   Note: the dissipated power shall be added to the same data from al the other installed bearings, to define the size of the lube oil cooler.

9.1.3. Mod.428

The following instructions shall be considered to carry out the calculation by means of the dedicated tool Mod.428:

COPY COMPLIANT to the original document resident on the computer system at the time of printing

5) Compile all the input data in the following sections to allow the initialization of the calculation (ref. Figure 8 Calculation module.):
   a. Operating Data.
   b. Thrust Bearing Data.

OPERATING DATA			
$v_{nominal}$	ISO VG	32	Oil type
T_{inlet}	[°C]	57.20	Oil supply temperature (45 - 60°C)
ρ	[kg/m^3]	846.16	Oil density at inlet temperature
ν	[mm^2/s]	16.51	Oil viscosity at inlet temperature
c	[BTU/lb/F]	0.4802	Oil specific heat at inlet temperature
ρ	[kg/m^3]	834.01	Oil density at outlet temperature
ν	[mm^2/s]	9.07	Oil viscosity at outlet temperature
c	[BTU/lb/F]	0.4971	Oil specific heat at outlet temperature
N	[rpm]	3000.00	Operating speed

THRUST BEARING DATA			
DN_{thrust}	[inch]	5	Thrust bearing diameter (5, 6, 7 inch)
N_{pads}	[nr]	6	Number of bearing pads
F_{axial}	[N]	15631	Axial load acting on the thrust bearing
$F_{axial\ min}$	[N]	9000	Minimum recommeded axial load as per Kingsbury's catalogue
$F_{axial\ max}$	[N]	20000	Maximum recommeded axial load as per Kingsbury's catalogue
$Q_{leakage}$	[lpm]	1.069	Min required oil supply flow for active side
$Q_{tot,max}$	[lpm]	2.137	Max total required oil supply flow for active and inactive side (2 x Q_leakage)
P	[kW]	0.799	Power to be dissipated
t	[µm]	7.555	Minimum film thickness
T_{outlet}	[°C]	76.6	Outlet oil temperature
ΔT	[°C]	19.4	Oil temperature rise
$ΔT_{max}$	[°C]	28.0	Max. acceptable oil temperature rise as per API 610's cl. 6.10.2.7
p	[MPa]	4.248	Maximum film pressure

Figure 8 Calculation module.

6) Run the calculation with the dedicated button.
7) Check the results. The results are acceptable on the basis of criteria at Figure 9 Acceptance criteria..

Warnings legend	
	= Acceptale data.
	= Not acceptable data. User shall modify input data to find an acceptable solution. If not possible, specific calculation shall be carried out.

Figure 9 Acceptance criteria.

8) If all the results are acceptable, the calculation is completed. Otherwise, input data shall be modified as indicated in the notes and the calculation shall be run again. If it is not possible to define a combination of input data to have an acceptable solution, a specific calculation shall be carried out, involving the manufacturer.
   Note: the dissipated power shall be added to the same data from al the other installed bearings, to define the size of the lube oil cooler.

COPY COMPLIANT to the original document resident on the computer system at the time of printing